SOT-23 Plastic-Encapsulate Transistors

FMMT617 NPN SILICON POWER (SWITCHING)

FEATURES

- 625mW POWER DISSIPATION
- I_C CONT3A
- 12A Peak Pulse Current
- Excellent H_{FE} Characteristics Up To 12A (pulsed)
- Extremely Low Saturation Voltage E.g. 8mV Typ.
- Extremely Low Equivalent On Resistance; $R_{CE(sat)}$

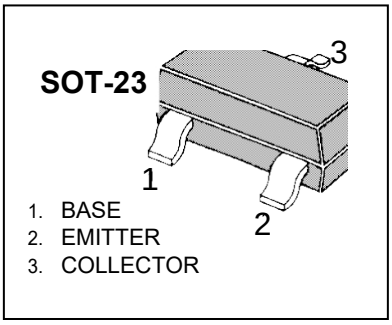

DEVICE TYPE	PARTMARKING	$R_{CE(sat)}$
FMMT617	617	**50mΩ at 3A**

ABSOLUTE MAXIMUM RATINGS.

PARAMETER	SYMBOL	Value	UNIT
Collector-Base Voltage	V_{CBO}	15	V
Collector-Emitter Voltage	V_{CEO}	15	V
Emitter-Base Voltage	V_{EBO}	5	V
Peak Pulse Current**	I_{CM}	12	A
Continuous Collector Current	I_C	3	A
Base Current	I_B	500	mA
Power Dissipation at T_{amb}=25°C*	P_{tot}	625	mW
Operating and Storage Temperature Range	T_j:T_{stg}	-55 to +150	°C

* Maximum power dissipation is calculated assuming that the device is mounted on a ceramic substrate measuring 15x15x0.6mm
**Measured under pulsed conditions. Pulse width=300μs. Duty cycle ≤ 2%
Spice parameter data is available upon request for these devices

ELECTRICAL CHARACTERISTICS (at T_{amb} = 25˚C unless otherwise stated).

PARAMETER	SYMBOL	MIN.	TYP.	MAX.	UNIT	CONDITIONS.
Collector-Base Breakdown Voltage	$V_{(BR)CBO}$	15	70		V	I_C=100μA
Collector-Emitter Breakdown Voltage	$V_{(BR)CEO}$	15	18		V	I_C=10mA*
Emitter-Base Breakdown Voltage	$V_{(BR)EBO}$	5	8 2	.	V	I_E=100μA
Collector Cut-Off Current	I_{CBO}			100	nA	V_{CB}=10V
Emitter Cut-Off Current I_{EBO}				100	nA	V_{EB}=4V
Collector Emitter Cut-Off Current	I_{CES}			100	nA	V_{CES}=10V
Collector-Emitter Saturation Voltage	$V_{CE(sat)}$		8 70 150	14 100 200	mV mV mV	I_C=0.1A, I_B=10mA* I_C=1A, I_B=10mA* I_C=3A, I_B=50mA*
Base-Emitter Saturation Voltage	$V_{BE(sat)}$		0.9	1.0	V	I_C=3A, I_B=50mA*
Base-Emitter Turn-On Voltage	$V_{BE(on)}$		0.84	1.0	V	I_C=3A, V_{CE}=2V*
Static Forward Current Transfer Ratio	h_{FE}	200 300 200 150	415 450 320 240 80			I_C=10mA, V_{CE}=2V* I_C=200mA, V_{CE}=2V* I_C=3A, V_{CE}=2V* I_C=5A, V_{CE}=2V* I_C=12A, V_{CE}=2V*
Transition Frequency	f_T	80	120		MHz	I_C=50mA, V_{CE}=10V f=50MHz
Output Capacitance	C_{obo}		30	40	pF	V_{CB}=10V, f=1MHz
Turn-On Time	$t_{(on)}$		120		ns	V_{CC}=10V, I_C=3A I_{B1}=I_{B2}=50mA
Turn-Off Time	$t_{(off)}$		160		ns	

*Measured under pulsed conditions. Pulse width=300μs. Duty cycle ≤ 2%

Typical Characteristics

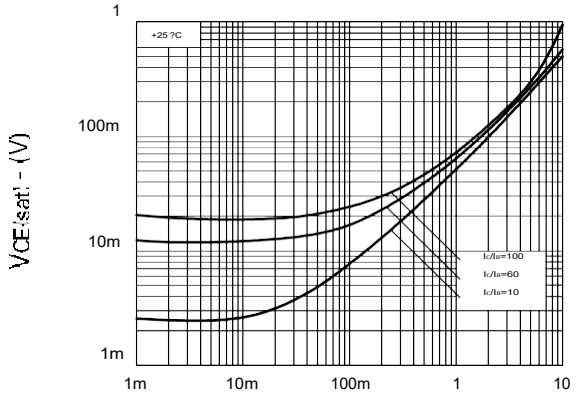

IC - Collector Current (A)

VCE(SAT) v IC

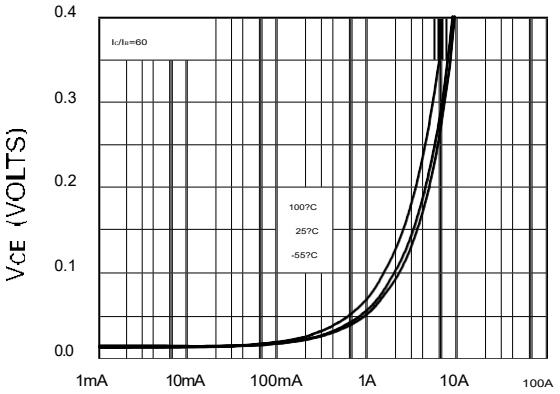

Collector Current

VCE(SAT) vs IC

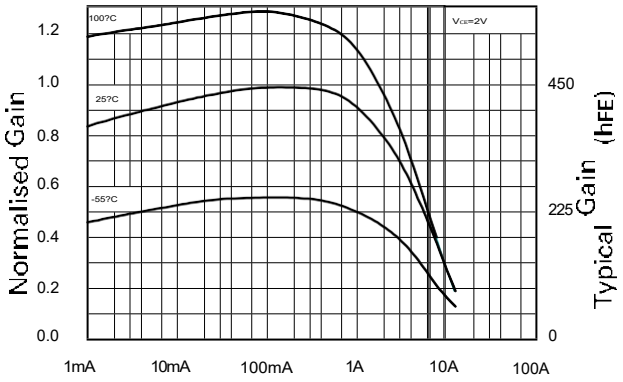

Collector Current

hFE vs IC

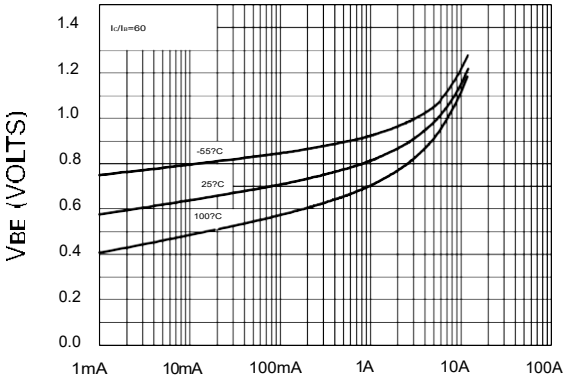

Collector Current

VBE(SAT) vs IC

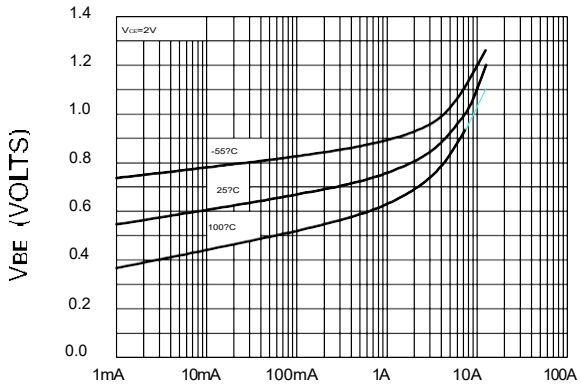

Collector Current

VBE(ON) vs IC

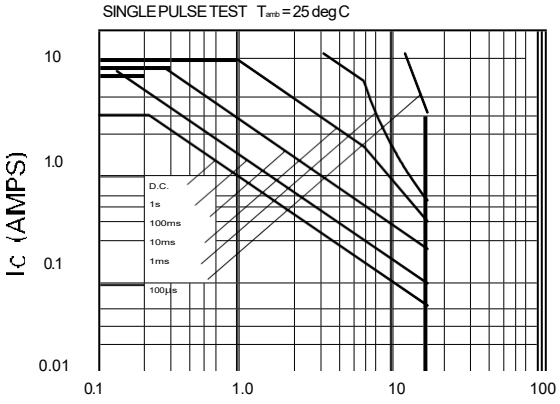

VCE (VOLTS) **Safe**

Operating Area

Typical Characteristics

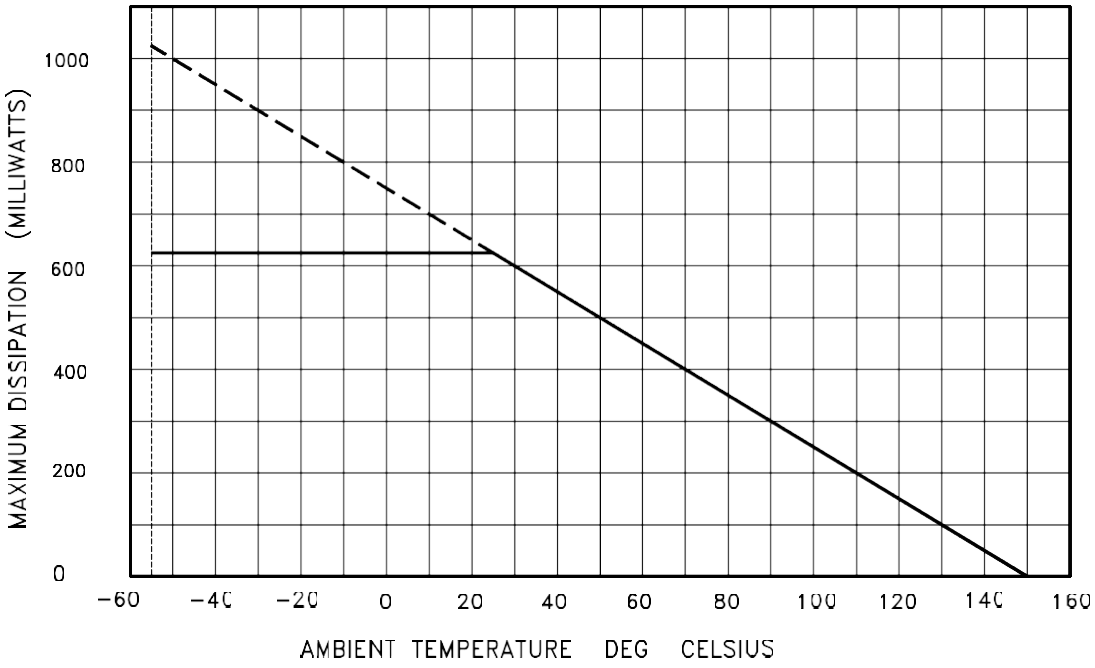

DERATING CURVE

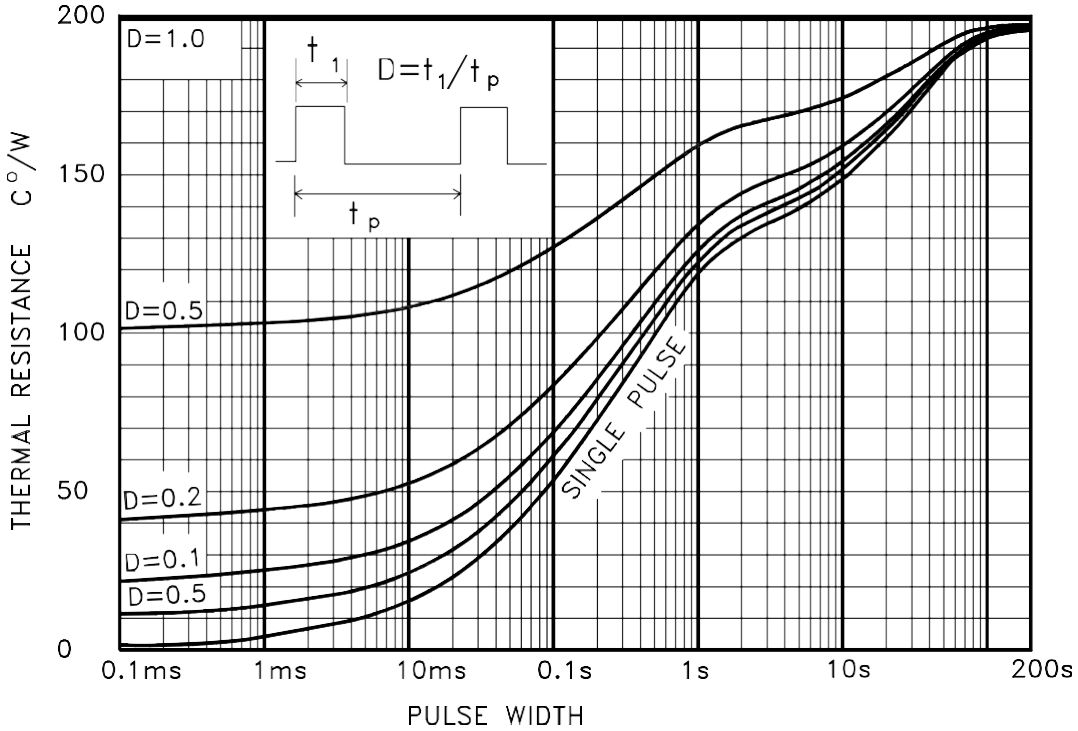

MAXIMUM TRANSIENT THERMAL RESISTANCE

PACKAGE OUTLINE

Plastic surface mounted package; 3 leads **SOT-23**

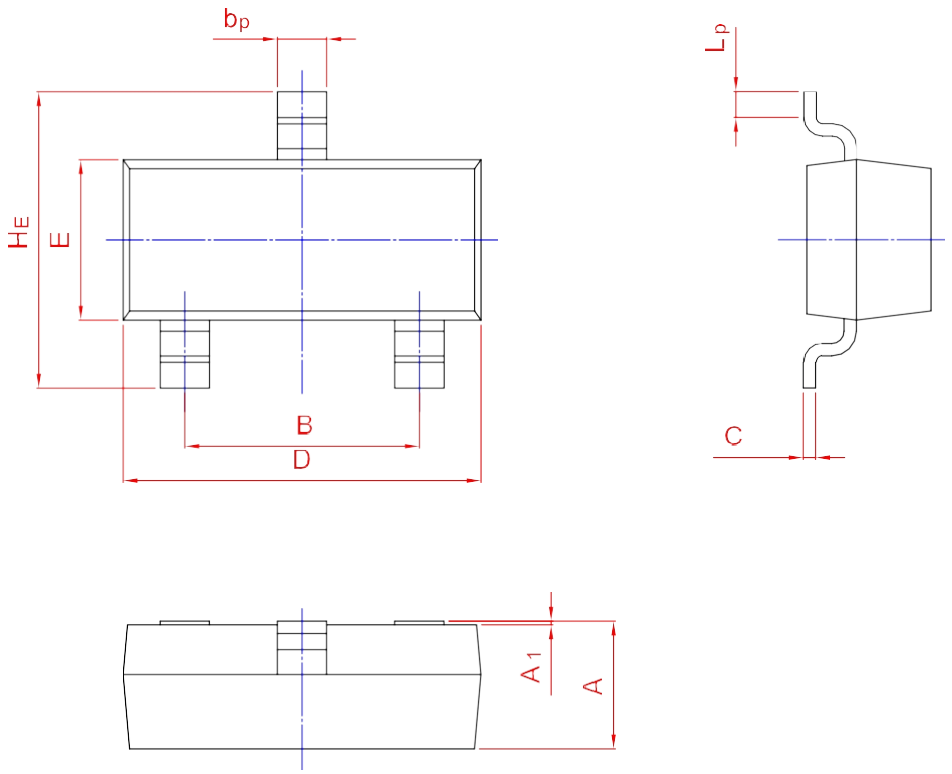

UNIT	A	B	b_p	C	D	E	H_E	A_1	L_p
mm	1.40 0.95	2.04 1.78	0.50 0.35	0.19 0.08	3.10 2.70	1.65 1.20	3.00 2.20	0.100 0.013	0.50 0.20